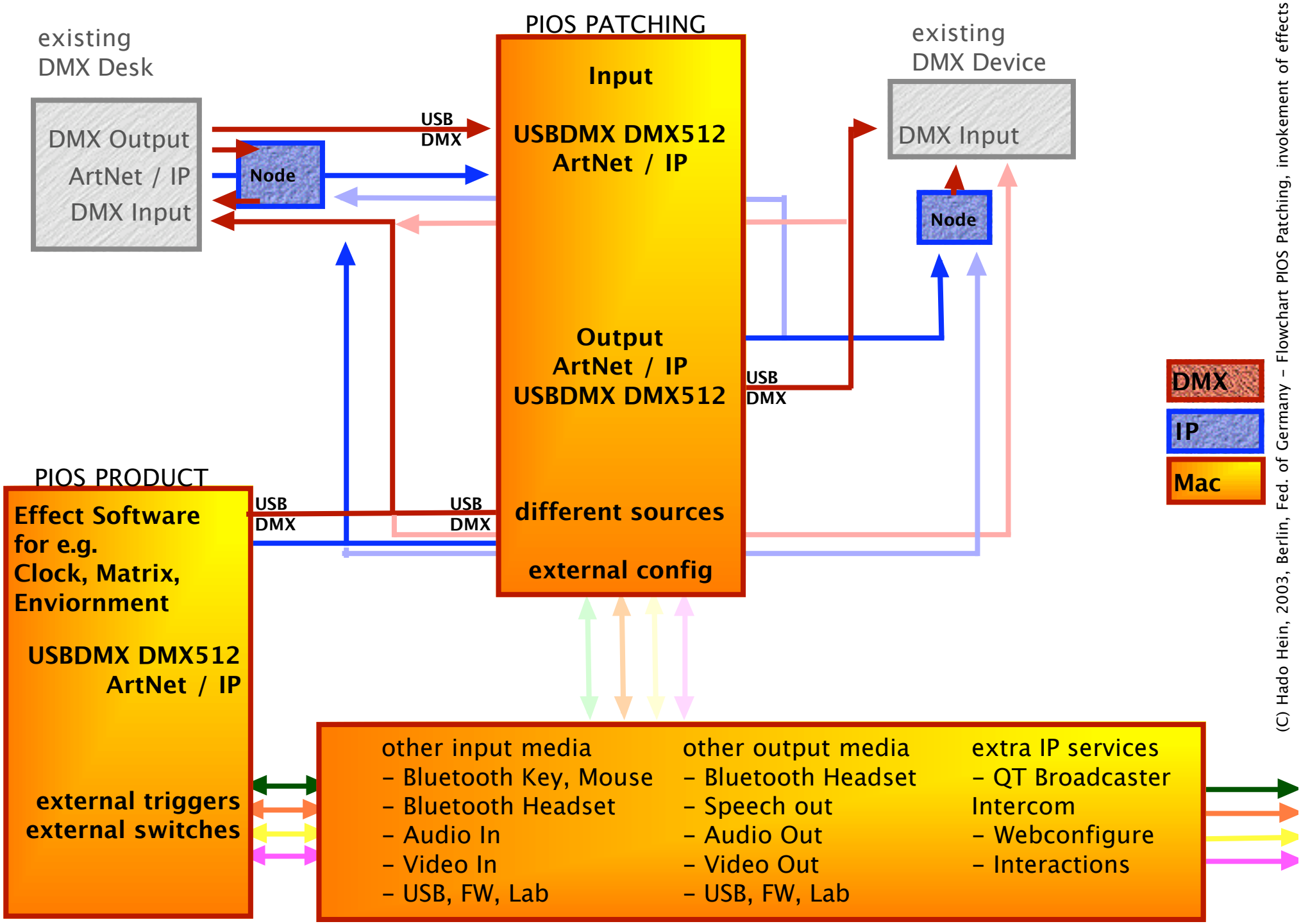

(C) Hado Hein, 2003, Berlin, Fed. of Germany - Flowchart PIOS Patching, invokement of effects